EXPECT STORIES FROM THE AVK WORLD

Expect… AVK

DEAR READER

We continue our line of articles focusing on the AVK products which can be part of solutions for global challenges like climate changes and sustainability.

We have described the importance of using functional and long-lasting valves with tight sealing; what is the point in searching for leaks, if the valve is the guilty one?

In this edition, we describe how AVK products can contribute to bringing the water supply closer to sustainability and the SMART way of thinking. SMART is when real time data are key elements in the supply network in regards to pressure and volume. Sustainability is when you prevent water from vanishing into the subsoil through cracks, and when no unnecessary energy is used in the supply network.

You also find an article about control valves that can effectively reduce water waste by controlling the pressure; a small piece in the big picture, yet of significant importance. Another article is about control valves series 859 without intelligent control but still with the same purpose; to control the water pressure in different pressure zones. Here, our colleagues from AVK UK compare water loss in the UK with the content of the Howden Dam Reservoir.

Enjoy your reading.

Michael Ramlau-Hansen

AVK INTERLINK NO. 47, AUGUST 2016

Published by
AVK Holding A/S 2-3 times a year in 5200 copies.

Chief editor
Michael Ramlau-Hansen - mrh@avk.dk

Marketing
Lise Rye Brix Østergaard - lios@avk.dk

Coordinator
Jette Jensen - jej@avk.dk

Frontpage picture
Photo of part of the stand at IFAT 2016 in Munich, Germany.

Index

PALMERSTON SOUTH ELEVATED WATER TANK PROJECT

AUSTRALIA

As part of Power and Water's ongoing strategy to secure the water supply for the growing population of the southern suburbs of Palmerston, Power and Water is building a new elevated water tank in Zuccoli, adjacent to the intersection of Lambrick Avenue and the Stuart Highway.

Craig Wright
Business Development Manager
SA,WA & TAS
AVK Australia Pty Ltd

This four mega-litres tank will provide supply to the suburbs of Zuccoli, Johnston, Bellamack and Palmerston South as well as interim supply to areas of Howard Springs. This will ensure Power and Water service standards are maintained to existing customers while allowing increased development in the area.

AVK Australia supplied a range of gate valves to this project including DN1000, DN750, DN600 and other sizes along with a Penstock from Orbinox. The tank will be 36.4 metres high and has a diameter of 28.5 metres. The wine-glass design was selected in consultation with the City of Palmerston mid-2012 and takes into consideration efficiency in use, cost effectiveness, low maintenance requirements, and aesthetic.

Construction began in the dry season of 2014 and completion is expected in the dry season of 2016. To find out more about this project, please phone Craig Wright, Business Development Manager for SA, NT & TAS on +61 8 8368 0920.

AVK OPENS SERVICE CENTRES IN SAUDI ARABIA

By Khloud Aiash, Marketing Coordinator, AVK Saudi Valves Manufacturing Co. Ltd.

In January 2015, AVK Saudi Valves Manufacturing Co. (AVK SVMC) opened the first service centre in Riyadh, the capital city of Saudi Arabia. This was the first of its kind in the kingdom.

The opening of the Riyadh service centre is highly appreciated and valued by the customers and has made their access to our products easier. They are now able to be advised by an AVK sales team about the products before they make the order.

Because AVK SVMC takes care of its customers and wants them to get served easier and faster, we have opened a second service centre sited in Dammam in the Eastern region in Saudi Arabia. This is also where the headquarters for the world's largest oil company, Aramco, is located. Aramco is one of our key customers. And currently AVK SVMC is their largest supplier of fire hydrants and valves for water applications. The new service centre is also supporting the requirement of Aramco to increase the amount of procurement from the domestic market. Likewise, the service centre will support the various ministries and other water authorities as well as local contractors.

The opening ceremony of the Dammam service centre took place on 27 February 2016. It was inaugurated by our CEO Mr Niels Aage Kjaer, Mr Ole Hedegaard, Managing Director of AVK Middle East, and Mads Helge, Director of Sales & Marketing of AVK SVMC together with the Eastern region sales team.

Both of the service centres are facilitating the sales activities by having complete sales departments with an expert team. Likewise, each centre has a warehouse holding the fast moving products and emergency stock. Also, the centres contain training facilities for the customers to be trained in the use and service of our products.

One of the employment strategies of AVK SVMC is to increase the ratio of Saudis being employed in our organization compared to expatriate workers, which is in line with the government's ambition to increase the Saudisation. Specifically, this is done by giving more opportunities to the Saudi females and focusing on their development in the private sector workforce. As a result, AVK has prepared a service department with an appropriate work environment in the new service centre, which will be fully operated by Saudi females. This will be similar to the Saudi females department the company already has in Jeddah head office.

AVK SVMC is planning to expand its business by opening more than 12 service centres in various regions in the Kingdom of Saudi Arabia. Additionally, AVK SVMC wants to expand the locations and thereby increase the customer base, and to make the distribution for its products and services easier and more effective.

"As part of increasing the number of service centres we also plan to implement our Leakage Package units at the same time", says Mads Helge. The Leakage Package unit is a 24/7 service where a leakage consultant operating from a minivan equipped with emergency materials is prepared to go immediately to site and support the customer if an emergency has occurred.

"We are restricted from doing excavation and heavy duty work as it requires a lot of permissions from the authorities. Instead, we bring the right repair materials or a new valve, which we are able to install on site", says Zahid Hussain who is Supervisor for the four existing Leakage Package units already in operation.

THREE PILOT EXTERNAL CONTROL UNITS, MALANG WATERBOARD

INDONESIA

Malang Waterboard in Indonesia has used more than 2,000 AVK gate valves as well as other valves for the NRW project running for six years. In addition to this project, AVK received an enquiry for an external control unit with three daily pressure adjustments for the control valve.

By Poul Erik Jensen, Managing Director, AVK Malaysia

Malang Waterboard wanted to simplify its operation and not use electrical controllers, the likes of Halmar. The idea was to have a separate valve and control unit that was not relying on the software and external management. The control unit should be installed in the roadside for easy access.

The unit developed by AVK Malaysia has one pilot on the valve for safety and three pilots in the control cabinet. Malang Waterboard wanted to move the control away from the valve for two reasons; flooding of the chamber and difficulties when accessing the chamber.

The control unit is connected to the valve with nylon-reinforced hoses and the pilot remaining on the valve ensures a maximum pressure being set in case damage is inflicted to the hoses. The control unit manages the three different pressures during the day with two solenoids with

timers. The timers only rely on the battery which should last one year of operation.

A data logger for pressure is installed at the downstream critical point and Malang Waterboard wants to maintain a pressure between 0.5 and 0.9 bar throughout 24 hours. The existing control valve had two pilots on the valve and a pressure fluctuating between 0 and 2.5 bar during the day.

When the AVK unit was installed it took about a week of daily adjustments to reach the requested pressure range throughout the day and the pressure has been stable since then.

AVK three pilot PRV - PDAM Malang

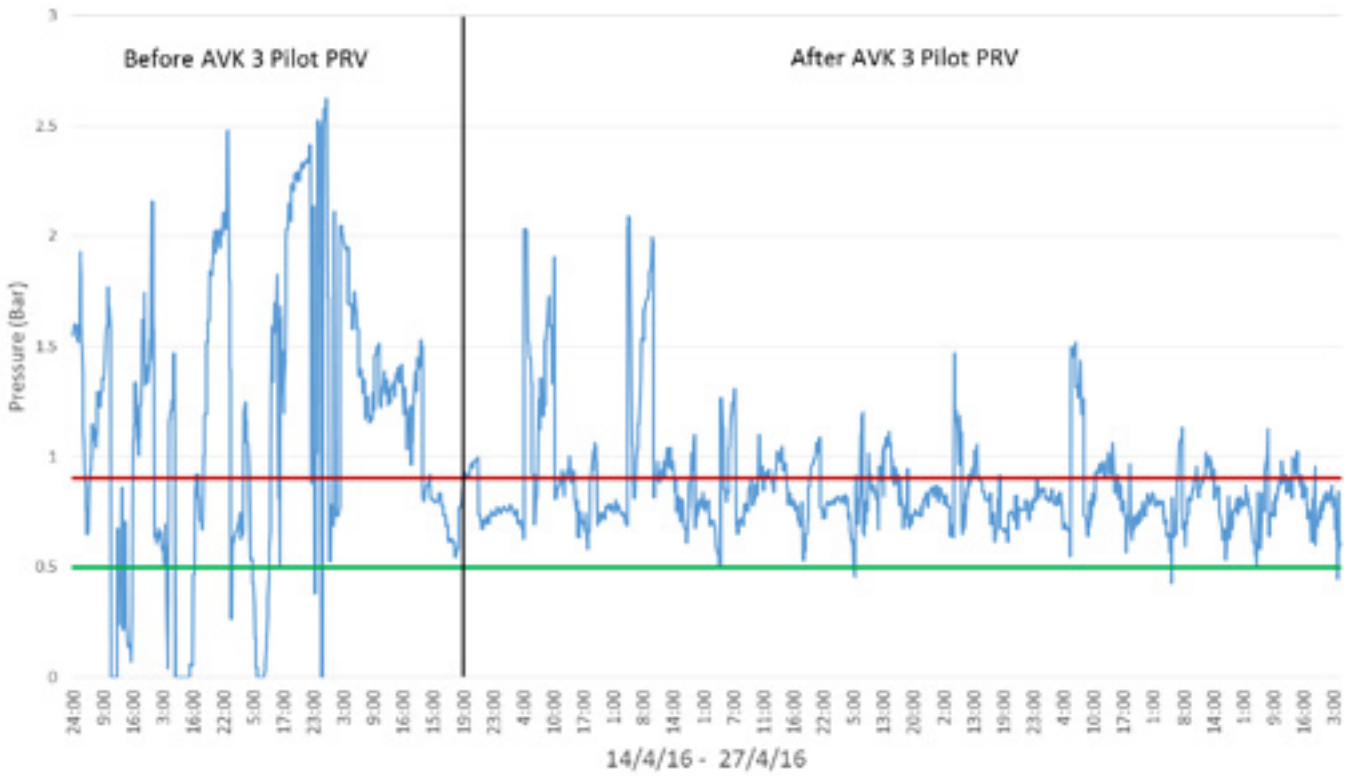

Data is taken from the data logger at the critical downstream point. A two pilot unit was installed, running for years. The improvement after 1 week of adjustments of the AVK unit is quite significant.

CONTINENTAL EUROPEAN SALES CONFERENCE ON 8 JUNE 2016

DENMARK

By Francisco Viskinge,
Sales and Marketing Director,
AVK International A/S

This year´s sales conference was held during the second week of June which was not per tradition, and the reason for this was that many of our sales managers and directors were attending the IFAT exhibition held in Munich, Germany on 30 May – 3 June 2016.

At the conference, Morten S. Nielsen awarded prices for highest growth among AVK companies in Continental Europe. General Manager Javier Garcia-Noblejas, AVK Válvulas, S.A. received an award for having achieved the highest growth in turnover and EBIT in 2014/15, and Managing Director Terje Gullaksen, AVK Norge AS for having achieved the highest growth in turnover and EBIT year to date (2015/16).

The conference day was very rewarding in respect to the professional and technical outcome. Social networking is also very important in order to bring the group closer together.

Managing Director Hendrik Kwakkel from AVK Nederland B.V. made sure to remind everyone at the conference to congratulate Group Director Morten Sæderup Nielsen on his 50th birthday.

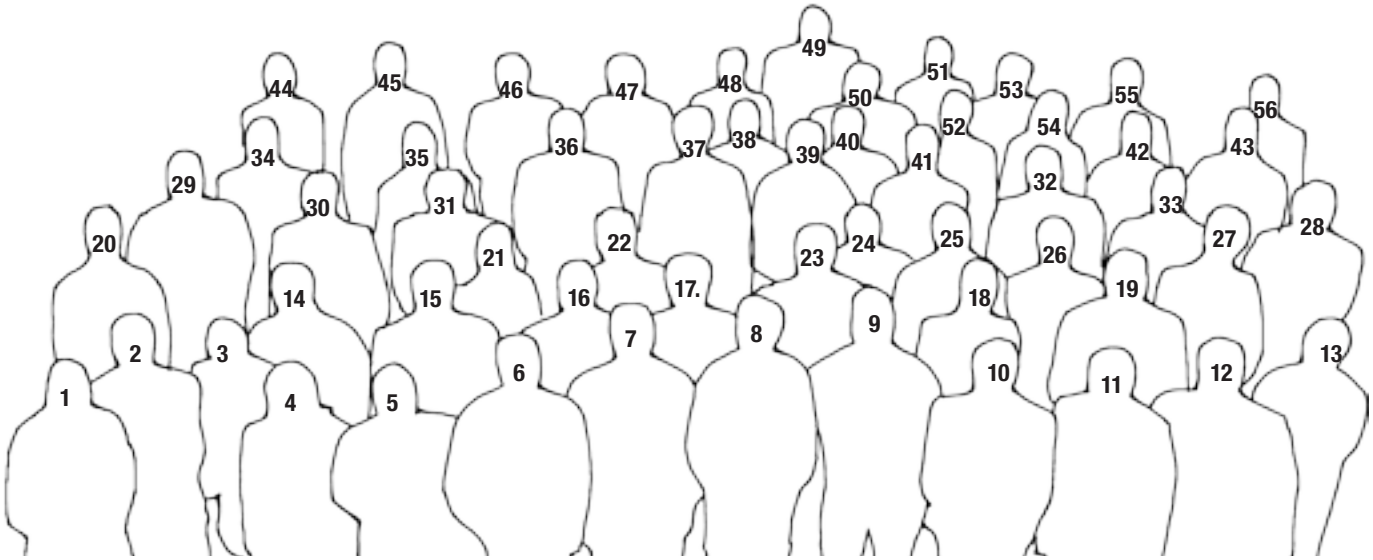

1. Javier G. Noblejas, AVK Válvulas
2. Nuno Guerreiro, AVK Válvulas
3. Lourdes Cibrian, CYL Knife Valves
4. Lene Mark, AVK International
5. Bo Ellerup, AVK International
6. Jerzy Bober, AVK Polska
7. Frank Lieser, AVK Armaturen
8. Hendrik Kwakkel, AVK Nederland
9. Terje Gullaksen, AVK Norge
10. Eddie Holmqvist, AVK Sverige
11. Xavier Valette, AVK France
12. David Sjöcrona, AVK Sverige
13. Jaroslaw Szmidt, AVK Polska
14. Yalchin Mammadov, AVKI, Azerbaijan
15. Sylvain Demichel, AVK Haut Marnaise
16. Per Møller, AVK International
17. Kieran Cantrell, AVK International
18. Elmira Haansbaeck, AVK International
19. Jesper Flarup, AVK Danmark
20. Morten S. Nielsen, AVK International
21. Ismail Sincik, AVKI, Turkey
22. Petr Kvicera, AVK VOD-KA
23. Tommy Porsmose, AVK Danmark
24. Gezim Murataj, AVKI, Albania
25. Martin Rud, AVK Norge
26. Guido Baldini, InterApp Group
27. Stijn Meirlevede, AVK Belgium
28. Maxim Volyntsev, AVKI, Russia
29. Martin Pedersen, Vatech 2000
30. Branislav Milosevic, AVKI, the Balkans
31. Gernot Mayer, AVK Armaturen
32. Garmt de Kroon, AVK Plastics
33. Kirill Korobitsyn, AVK International
34. Kent Petersen , AVK International
35. Javier Fariña, InterApp Valcom.
36. Lars Sindal Jensen, AVK International
37. Petr Kuzela, AVK VOD-KA
38. Paolo Francolino, InterApp Italiana
39. Francisco Viskinge, AVK International
40. Edgar Pfister, InterApp Switzerland
41. Jesper Kallehauge, AVKI
42. Hubert Klikowicz, AVK Armadan
43. Dirk Jansegers, AVK Belgium
44. Albert Dokter, AVK Nederland
45. José Miquel Aranguren, AVK Válvulas
46. Miro Kopyta, AVK Armadan
47. Sander Arendsen, WouterWitzel EuroValve
48. Tadeusz Stryjski, AVK Armadan
49. Allan Povlsen, Vatech2000
50. Felix Gyori, AVK International, Romania
51. Mika Nurmi, AVK Finland
52. Pedro Lizarraga Urrutia, CYL Knife Valves
53. Guillaume Vion, AVK Maghreb
54. Helle Timm, AVK Belgium
55. Stefan Stegenga, AVK Plastics
56. Claus Møller-Nielsen, AVK International

GLOBAL MANAGEMENT CONFERENCE ON 9 - 10 JUNE 2016

DENMARK

By Michael Ramlau-Hansen,
Brand Manager,
AVK Holding A/S

The Global Management Conference was held on 9 – 10 June 2016 with a record high number of participants. And with this year´s 88 participants, the number has increased with 181% since the first conference was held back in the early 1990s; an increase which pretty much corresponds with the development in the AVK Group of companies.

As per tradition, our owner and CEO, Niels Aage Kjær opened the conference wishing us all a fruitful meeting.

Right now, AVK is going through an exciting phase with new ideas for the future; i.e. within the digital world with great perspectives for our valves and hydrants. We intend to optimize our digital presence in the market introducing more intelligent products and keeping an equal dialogue with our customers. At the conference, Sten Dyrmose, managing director at Flonidan A/S presented an intelligent smart gas meter which they will deliver to a Dutch gas supplier during the next six years.

We were also introduced to the more than 60-70 new AVK products which have been launched since the last conference was held two years ago. Some of these new products come from some of the newest companies in the AVK Group: AFTech FLOW that is now part of the AVK Flow Control in Australia, VCW Valvulas-Industria in Brazil and last but not least Premier Valve in South Africa.

Besides the professional content of the conference, we also appreciate the social aspect where colleagues across countries and even continents get together to share experiences and references. As per tradition, the first day concluded with a sailing trip on the Silkeborg lakes and a short visit at Niels Aage Kjær´s private home.

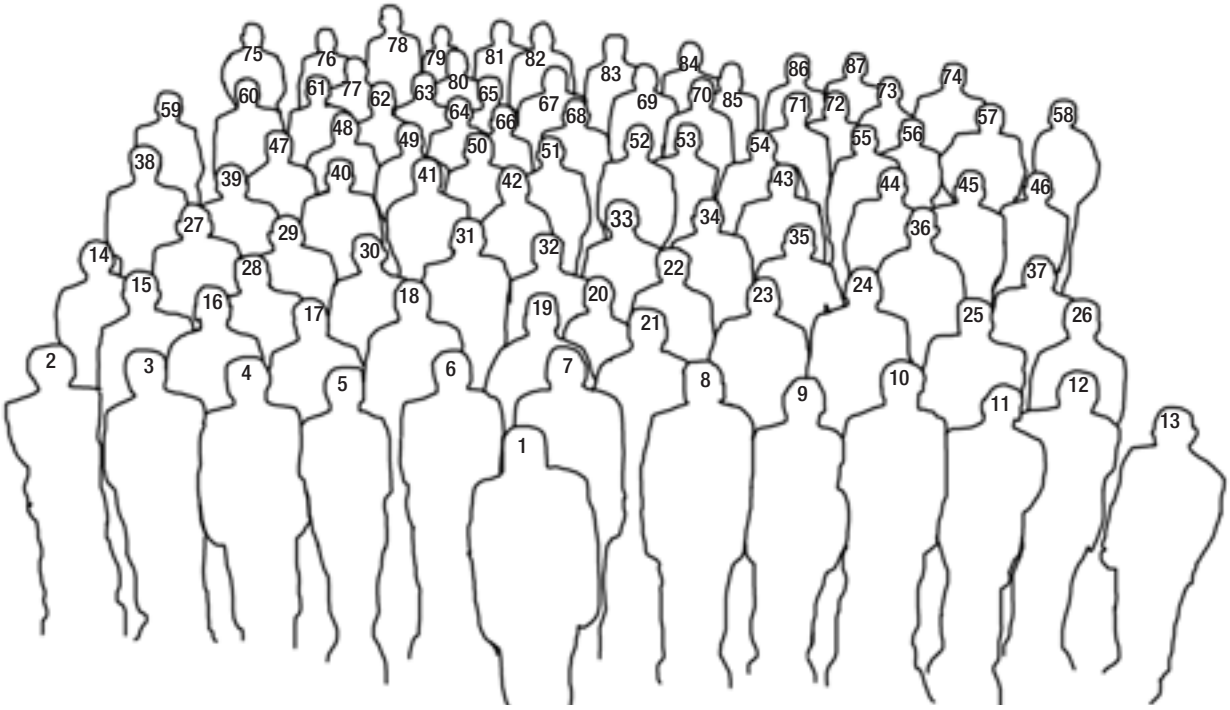

1. Niels Aage Kjær, AVK Holding
2. Yasuhiro Shimizu, Shimizu Kogyo
3. Jojo I Esguerra, AVK Philippines Inc
4. Jerzy Bober, AVK Polska
5. Anne-Mette Kjær, AVK Holding
6. Bo Frank Nielsen, AVK Valves, China
7. Matthias Dühr, TEC artec GmbH
8. Karsten Pedersen, Australasia
9. Phillip Yuen, AVK Valves Korea
10. Hendrik Kwakkel, AVK Nederland
11. Allan Ernstrøm, AVK Holding
12. Eddie Holmqvist, AVK Sverige
13. Niels-Erik Lundvig, Q-Transport Mat.
14. Javier Garcia Noblejas, AVK Válvulas
15. Mika Nurmi, AVK Finland
16. Ole Hedegaard, Middle East
17. Fran Brody, Aqua-Gas Man.
18. Trevor Sculthorpe-Pike, I.C. Valves
19. Søren Kjær, AVK Holding
20. Pernille Kjær, AVK Holding
21. Frank Lieser, AVK Armaturen
22. Oluf Johnsen, AVK Holding
23. Andrés Barron, Orbinox Commercial
24. Tommy Porsmose, AVK Danmark
25. Olivier Notz, InterApp Technics
26. Paulo Segura, VCW Valvulas
27. Niels Erik Andersen, AVK Holding
28. Manfred Leufgen, InterApp
29. Szymon Ulanowski, AVK Gulf
30. Lars Kudsk, AVK Holding
31. Tjaart van der Walt, AVK South Africa
32. Brian McGugan, AVK Holding South Africa
33. Michael H. Ladegaard, AVK Holding
34. Garmt de Kroon, AVK Plastics
35. Xavier Valette, AVK France
36. Peter Svalgaard Henriksen, I.C. Valves
37. Anders Jensen, AVK Tooling
38. Peter Thomson, Premier Valves
39. Javier A. Fariña-Casas, InterApp
40. Sten Dyrmose, Flonidan
41. Bo Johansen, AVK Holding
42. Terje Gullaksen, AVK Norge
43. Kenneth Blom, AVK Tech
44. Knud Fl. Madsen, AVK Holding
45. Peter Michael Larsen, AVK Plast
46. Torben Andersen, AVK Holding
47. Kim Mølgaard, AVK Advanced Castings, Anhui
48. Arne Hjortshøj, AVK Holding
49. Bjørn Johansen, AVK Valves Anhui
50. Bo Stubkier, AVK Holding
51. Andreas Geisinger, AVK Valves, India
52. Anders G. Christensen, AVK Gummi
53. Morten S. Nielsen, Continental Europe
54. Joseba Azurmendi, Orbinox Valves
55. Dimitrius Damalgo, AVK Válvulas, Brasilien
56. Paulo Francolino, InterApp Italy
57. Søren Ø. Sørensen, China & Southeast Asia
58. Carsten Fode, Chairman of the board
59. Michael Ramlau-Hansen, AVK Holding
60. Sylvain Demichel, AVK Haut Marnaise
61. Daniel Mulder, World Valve
62. Jacob Kjær, AVK Holding
63. Poul Erik Jensen, AVK Valves, Malaysia
64. Peter Lorentzen, AVK Gummi
65. Guido Baldini, InterApp
66. Tadeusz Stryjski, AVK Armadan
67. Allan Poulsen, Vatech2000
68. Francisco Viskinge, AVK International
69. Carsten Sørensen, Southeast Asia
70. Rasmus Martensen, AVK Vietnam
71. Petr Kuzela, AVK VOD-KA
72. Paul Hubbard, UK & South Africa
73. Dirk Jansegers, AVK Belgium
74. Al Jurkonis, American AVK
75. Hatem Shaban, AVK Flow Control ME
76. Daniel Orrego, Orbinox Chile
77. Lars Holmgaard, JCH
78. Pedro Lizarraga Urrutia, CYL Knife Valves
79. Lourdes Cibrian, CYL Knife Valves
80. Keld Moestrup, AVK Holding
81. Wayne Needs, AVK Flow Contol
82. Peter Ebdrup, AVK Flow Control
83. Joe D'Angelo, Orbinox Canada
84. José Antonio Jauregui, Orbinox SA
85. Paul Jennings, AVK UK
86. Robert Schuuring, Wouter Witzel
87. Michael H. Ladegaard, AVK Holding

THE APP THAT MAKES IT EASY GLOBAL

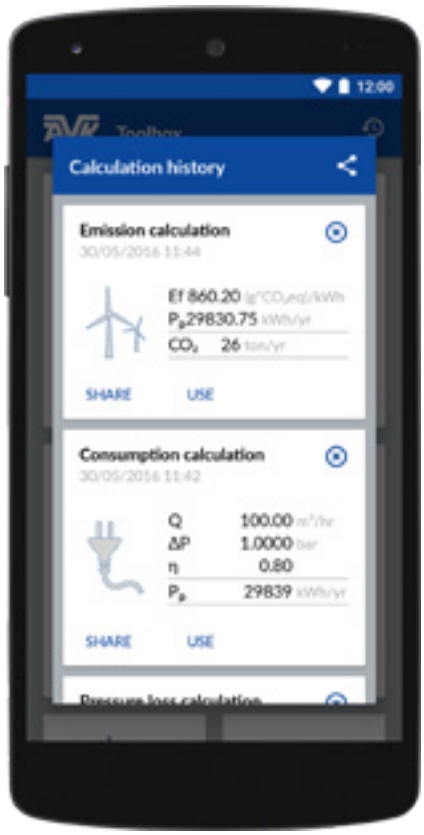

By Michael Ramlau-Hansen,
Global Brand Manager,
AVK Holding A/S

At AVK we have launched a new service to our customers. A new calculation APP has seen the light of day.

The AVK app is a tool for internal and external use for calculation of important factors in relation to flow parameters as well as energy consumption. The calculating functions are:

- Flow calculator
- Water loss calculator
- Pressure loss calculator
- Power consumption calculator
- Co2 emission calculator

The app can be found on the avkvalves.com global website with links to download and a user guide. At present, the APP is developed for Android but very soon it will also be available for IOS devices.

HOT TAPPING IN A SLOVAKIAN GAS LINE

SLOVAKIA

Photo 1 Tee welded on 100 mm steel pipeline

Photo 2 Ready to connect pipe to the end user

Much of the Russian natural gas consumed in Europe is pumped via Ukraine and Slovakia through 63 bar transmission lines. In Slovakia, natural gas is used domestically both for heating and cooking, distributed in steel and PE lines, and with a lot of AVK valves and surface boxes already installed.

By Kieran Cantrell,
Market Development Manager,
AVK International A/S

Gate valves with flanges and PE-ends are used, depending on the type of installation. Marian Drahovsky of Aquagas s.r.o., the AVK dealer in Slovakia, has recently entered into the market for tapping into gas pipelines of all dimensions and pipe types. In Krajné, a small village 100km north of Bratislava, a private customer wanted gas supplied to his house from a 0,9bar DN100 steel line in the street. Hot tapping was required and Aquagas was called in.

After excavating the gas line in the side of the street, a steel plate was welded onto the line followed by a welded tee with a DN50 outlet (photo 1).

An AVK 06/70 flanged gate valve was then attached directly onto the tee. After attaching a drilling machine with a 46mm cutter, a hole was drilled through the valve and into the gas line, pressure checked (using both a manometer in the drilling tool and leak-detection liquid) (photo 3).

Then the valve was closed, the tool was removed, the connection tested once more which was then pronounced safe and ready for connecting the DN50 PE pipe to the customer (photo 2). A quick and safe job done!

Photo 3 Testing for leakage

SMART CITY GLOBAL

Image source: The Case for Smart City Communications White Paper by Ventura Next for MEFC

Throughout the world, we see an increasing urbanisation, and the fast-growing population in the cities poses challenges for infrastructure, environment etc.

By Michael Ramlau-Hansen, Global Brand Manager, AVK Holding A/S

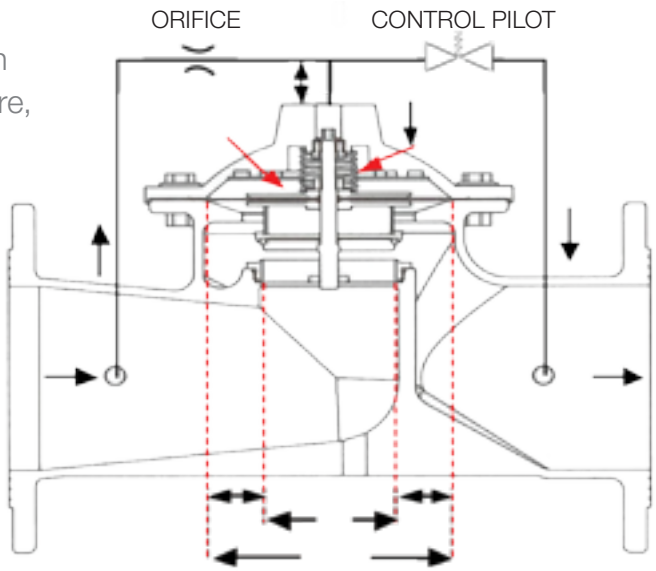

The basic design of a series 859 AVK Control valve with a simple schematic illustration of the pilot valve, and how the unit operates.

A SMART city is a place where traditional network and services are made more efficient with the use of digital and telecommunication technologies, and thus improving the quality of life for citizens and making cities more sustainable for the benefit of its inhabitants and businesses.

The SMART city concept aims at better use of resources and less emissions. It means smarter urban transport networks, upgraded water supply and waste disposal facilities, and more efficient ways to light and heat buildings. And it also encompasses a more interactive and responsive city administration and safer public spaces.

Water and wastewater are part of the infrastructure, and AVK has several products to offer in connection with sustainable SMART water management. In order to make a water supply intelligent, it is necessary to control the supply system like water pressure, water quality and pollution. The challenges are to streamline the operation, maintain and increase safety of the supply net and water quality and at the same time protect the environment and water source.

Real time data can be used to identify the status of a water distribution system at a particular point in time. By archiving such data, analysis can be performed to identify various performance trends under different conditions. Use of real time data can be further used to evaluate the performance of the system under different conditions and adjust accordingly, if required.

Also, urbanisation and the impact of global climate change are accelerating water scarcity for cities around the world. Securing enough water for a growing population requires more efficient management of freshwater supply.

In order to mitigate water scarcity, it is important that waterworks minimise water losses. Non-revenue water is a huge source of wastage through leaks, theft, or metering inaccuracies in utility networks and therefore, reducing water loss is very important. Using control valves, the waterworks can focus on conducting an economically advantageous activity; i.e. reducing pressure to a minimum during night when the water consumption is low. This could be by use of an automatic control valve series 859 from AVK which can be easily altered to suit different functions and applications.

How does a control valve function?
A control valve is designed for controlling pressure, flow, volume, water level, or temperature, and can be split in two groups; a self-acting valve under which a pilot operated is counted and a control valve with secondary energy like electrical power or compressed air.

In this context, we deal with the self-acting pilot operated type set up as a pressure reducing valve. The pressure reducing valve is automatically reducing a higher inlet pressure to a lower downstream pressure regardless of changes in flow rate or inlet pressure.

The basic idea of how a control valve works is to load a certain force by means of a spring on one side of a diaphragm, and let the controlled downstream pressure work as force on the other side of the diaphragm. When the two forces outbalance each other, the downstream pressure is set. To change the downstream pressure, you need to adjust the spring force and this is done manually.

If we want the SMART aspect to come into the picture, we need to remove the spring and put something automatic instead. And this is exactly what we do. Instead of using a handle and spring, we put some automation in place that can receive input from the SCADA (Supervisory Control And Data Acquisition) system to put more or less force on the diaphragm, and thus lower or increase the downstream pressure. Now we have a control valve that can communicate with the SCADA system which again communicates with other equipment like water meters and pumps and in this way, the products are communicating with each other based on real time data.

AVK is offering products to sustainable SMART water management.

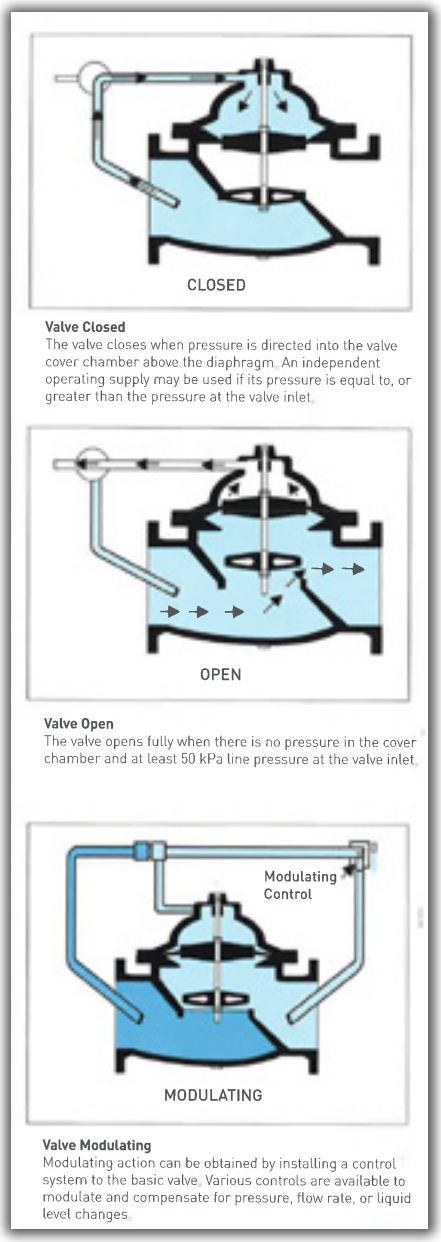

From Premier Valve, one of the new companies in the group, we have this very simple easy to understand illustration on how a self acting, pilot operated control valve works.

WIDE BAY WATER CORPORATION ACKNOWLEDGES AVK FOR ITS CONTRIBUTIONS TO THE SUCCESS AT GHOST HILL

Project: associated water main relocations for the main street road works upgrade - lowering road over Ghost Hill

By Lawrence Eckard,
Infrastructure Civil Engineer,
Wide Bay Water Corporation

and

Adrian Kociolek,
Business Development Manager QLD,
AVK Australia Pty Ltd

Wide Bay Water Corporation (WBWC) is responsible for the provision of water and wastewater services to the Fraser Coast and is wholly owned by the Fraser Coast Regional Council (FCRC). In December 2015, WBWC was notified of impending road upgrades adjacent to their major elevated storages supplying the city of Hervey Bay. The road works involved changes to the elevation of major road under which WBWC has a significant number of trunk water mains that would be affected by the proposed works.

Any reconfiguration of the water network assets needed to be undertaken prior to the commencement of roadworks and with the road reconstruction project scheduled to commence at the end of April 2016, this left only a small window of time to source materials and undertake the works. Compounding this was the reality that the affected infrastructure is an integral part of the trunk network and that any interruption to supply had to be minimal.

WBWC estimated that, due to the location, the amount of services located within the road reserve, and the unfavourable ground conditions due to the presence of rock, a minimum of one month would be required for construction. This left just over two months to have fittings delivered to site. Orders for materials were placed based on a basic survey and sketch of the new layout to determine what fittings were required. The materials identified included a number of large diameter valves which AVK supplied in a compressed delivery schedule, thereby enabling works to start on the reconfiguration of the network in March 2016.

The work itself was hampered by the volume of services within the road reserve and the need to work around these services. A critical part of the construction required two DN450 water mains to be installed across the road underneath a trunk water main that remained in operation during construction. This was accomplished by replacing the socketed pipe section, with a pre-assembled flanged section spanning the trench and services.

This section needed to be installed during the day to allow continual monitoring of the distance between the construction equipment and the overhead power lines above. This was less than ideal from a continuity of supply perspective as the works interrupted the resupply of the reservoirs. Given that the works were being undertaken in summer, and therefore the higher demand period of the year, the available time to complete the works was minimal. WBWC was able to cut, remove, replace, bolt up and thrust this 7m long section within 3 hours, thereby keeping the city in water.

All works were completed and placed back in service on the third week, enabling WBWC to be clear of the road works one week earlier than required. WBWC acknowledges AVK's contribution to the success of this project through their reduced delivery schedule and their after sales support. AVK promptly attended to the site in order to remedy an issue we experienced which, upon investigation, was determined to be the fault of a third party supplier.

AVK AT IFAT IN MUNICH – WITH NEW AND BIGGER BOOTH, MORE VISITORS AND TRULY INTERNATIONAL

GERMANY

By Ilka Keilen,
Marketing Manager,
AVK Armaturen GmbH

On a total surface of 230,000 m² and with more than 138,000 visitors from approx. 170 countries, the IFAT again underlined its character of being the globally leading trade fair for environmental technologies.

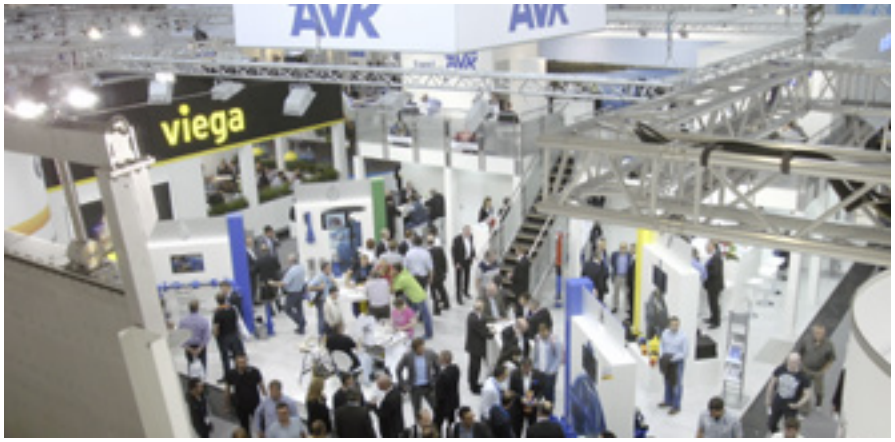

Frank Lieser, AVK Armaturen GmbH, and Niels Aage Kjær, owner of AVK

AVK Armaturen, in close cooperation with AVK International, AVK Plastics, AVK Netherlands, AVK Polska and Bermad, showed up with a new and very modern booth design on a total surface of 204 square meters. The idea behind the new concept was to have more open space encouraging visitors to easily drop in and have a lively dialogue with our AVK experts. Therefore, the booth was clearly structured with four islands representing the three relevant segments for IFAT: water, sewage and gas, while focusing on the latest and most important products. The lounge area was upstairs for the first time – with a big wall print of a lake at the Danish coast, inviting people for a short relaxing holiday in Demark in the middle of a hectic and over-crowded exhibition.

Thanks to the professional lead management, we could quickly see another increase in the number of visitors to our booth (+13% compared to 2014) and again an increased share of international visitors. The visitors who came the farthest, as recorded, came from New Zealand, Chile and China!

As for the products, the new threadless connection system Supa Lock™ celebrated its premiere at the IFAT and received enormous attention from people all over the world. But also the gate valves in the optimized design, our solutions for wastewater treatment, several different hydrants, control valves, the Supa Maxi™ program and the plastic surface boxes were the most discussed products.

Another premiere was our charity event. An airbrush artist was live airbrushing AVK shirts during the exhibition, either with his own lay-outs or based upon individual wishes of the visitors, including a series of custom-made hydrant shirts for the Kjaer family. The visitors paid 15,- EUR per shirt which will be 100% donated to the Children's cancer support association. During the exhibition we were already able to collect a sum of 455,-. But we have more airbrushed shirts left from the IFAT waiting to be sold, too! We are confident to be able to donate a nice big sum in the end. Please feel free to ask for a shirt, if still available! Just send an e-mail to keilen.ik@avk-armaturen.de.

The balcony on the first floor turned out to be the ideal place to promote the new Expect…AVK promises visuals and reinforce our branding concept. Visitors confirmed to be truly impressed by this appearance of AVK and we are very confident to see a positive impact of this exhibition on our business.

Due to the ever increasing success of the IFAT, the Munich trade fair organization will start with the construction of two new exhibition halls this summer that will be ready for IFAT 2018, and give us a chance to get more space for our booth. As Morten Nielsen put it at this year's IFAT: "Everybody is happy with the booth, but we need more space!"

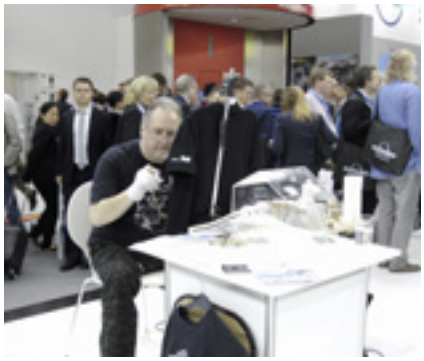

SUPA LOCK™ – THE NEW THREADLESS CONNECTION SYSTEM FROM AVK

AVK International have recently launched a completely new range of valves, tapping saddles and fittings with a new and unique way of assembling the products. The patented Supa Lock™ system ensures a corrosion-free joint combined with fast and easy assembly. The typical alternative are valves and fittings with a threaded connection, which are more time consuming to install.

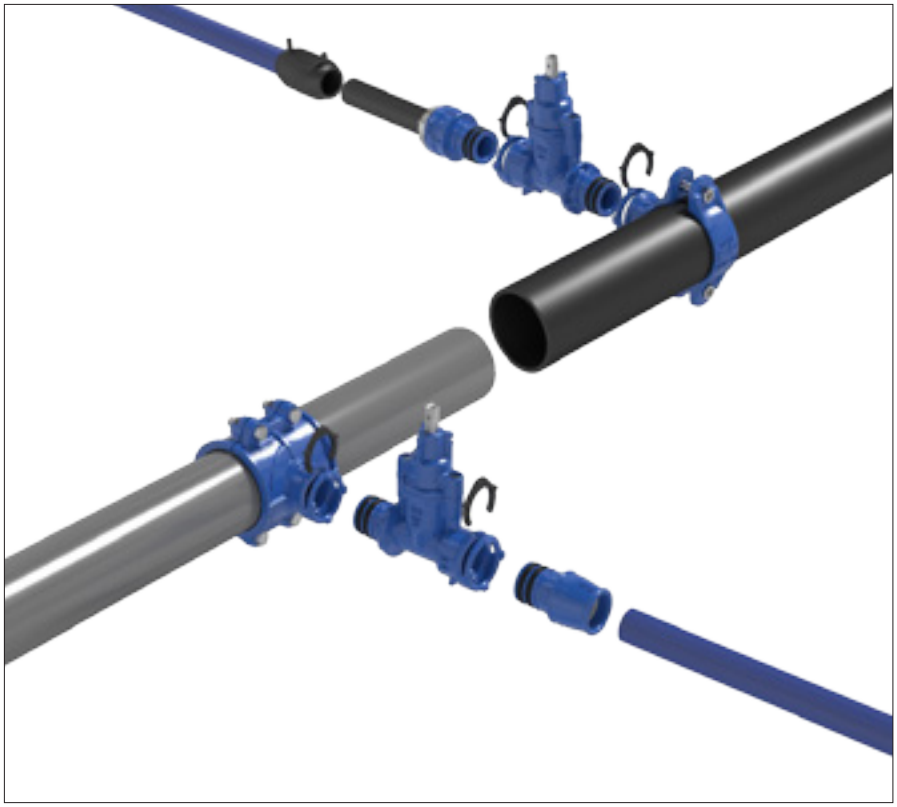

By Lene Mark,
Marketing Manager,
AVK International A/S

Easy two-step assembly and extra safety

Having lubricated the O-rings, the Supa Lock™ spigot end is pushed into the Supa Lock™ socket end, the safety retainer is clicked on - and the assembly is done! Fast and easy – you cannot go wrong.

The Supa Lock™ safety retainer is self-locking whenever there is pressure in the pipeline and no accidental disassembly can take place. Also, when the joint is exposed to bending as a result of ground movements, the large O-rings provide maximum safety.

360° rotation of Supa Lock™ fittings

The free rotation of the joint allows the installer to direct the service pipe outlet in any direction from the main pipe, thus avoiding collision with other pipes or obstacles in the trench. This is a unique feature which is only obtainable by use

of the Supa Lock™ system. Free rotation is restricted for the valves and the threaded connectors used for drilling machines to enable an effective drilling.

A wide range in ductile iron and brass
The wide Supa Lock™ range consists of service connection valves with Supa Lock™ spigot ends and socket ends, three types of ball valves in brass, two types of tapping saddles along with a long range of fittings in both ductile iron and brass.

Supa Lock™ marketing
You find all the relevant information on www.avkvalves.eu/en/insights/supalock. Here you will find animation, installation video and documentation such as brochure and datasheets. Additionally, you will find a FAQ section, where we continually try to answer the most frequently asked questions.

Feedback from the customers
So far we have received only positive feedback. Everyone who tries to assemble the products find it surprisingly easy. We experienced this when we presented the Supa Lock™ range at this year's IFAT in Munich, Germany, and from our local waterworks in Skanderborg, we received the following statement: "I have never tried anything easier than this. It takes minimal effort because all tools and components can be handled with just one hand".

NAMBOUR SEWER TREATMENT PLANT UPGRADE

AUSTRALIA

Unity Water has completed a major upgrade to the Nambour Sewage Treatment Plant which serves the communities of Nambour, Woombye, Palmwoods, Yandina and Eumundi. The upgrade significantly improves the treatment standards of the plant and caters for the anticipated population growth in these catchments.

Craig Wright
Business Development Manager SA, WA & TAS
AVK Australia Pty Ltd

Unity Water chose membrane bioreactor technology as the optimal process for the Nambour Sewage Treatment Plant after investigating several options. The membrane bioreactor treats and filters pollutants and nutrients as small as 0.03 microns out of the effluent. By comparison, a human hair is 70 microns, so the membrane bioreactor filters out bacteria and even viruses.

The plant can treat up to 30 million litres of wastewater each day. The upgrade of the Nambour Sewage Treatment Plant delivers a number of important benefits to its local communities and environment, including:

- Catering for the growing population in the area
- Increasing the standard of wastewater treatment, significantly reducing nutrients in the effluent, reducing the impact on the environment
- Improving the quality of water discharged to the Maroochy River by reducing its nitrogen by 13 tonnes per year
- Phosphorus by 7 tonnes per year
- Suspended solids by 20 tonnes per year
- Providing recycled water for irrigation and dust suppression
- Delivering a long-term sustainable wastewater treatment capability

A 1000mm full fabricated SS316 KGV with VITON seat, table D, 10 bar WP with special epoxy coating for harsh conditions was fitted at the end of L1 rising main inlet to Kawana STP by Unity Water.

AMERICAN AVK TEAMS UP WITH THE ALLIANCE FOR PE PIPE

USA

Imagine a potable water distribution system with no corrosion, no joints between pipe lengths, or any mechanical connections with valves and hydrants. The system is monolithic, seamless, self-restrained, and leak-free – and will last for over 100 years… HDPE water distribution systems provide a real solution for non-revenue water, as they are exactly that.

By Michael Chambon, Business Development, American AVK

Since January 2015, American AVK has been a member of The Alliance for PE Pipe (the Alliance). The Alliance hosts educational events for municipal leadership, field staff, consulting engineers, and utility contractors.

The Alliance meets face-to-face with over 3,000 of these people annually to share knowledge on the features and benefits of the pipe and related equipment. These educational meetings include a demonstration of the HDPE fusion process, including butt-fusion and electro-fusion. The Alliance is comprised of HDPE industry players, including resin and pipe manufacturers, fittings and electro-fusion controller manufacturers, pipe-bursting companies, and McElroy butt-fusion equipment. AVK joined the Alliance in 2015, providing the Alliance's first solution for fusing valves and hydrants into the water system. Prior to AVK joining the Alliance, this aspect of training and promoting the HDPE system was simply addressed with mechanical fittings.

The format for these sessions is called a "Roadshow," and it begins with a commitment from a municipal water authority to host the session. A twenty-foot truck carries the equipment, displays, and pipe samples to every show. The Roadshow team unpacks and sets up for shows and repacks the truck for delivery to the next Roadshow. This assortment includes AVK series 66 fusible gate valves and a red, white, and blue series 2780 fire hydrant with a PE base.

There is a full agenda of Roadshows for 2016 and American AVK also participated in the Alliance's booth at the AWWA show in Chicago this June. Along with pipe and fitting fusion, there will be live pipe-bursting demonstrations. Check out the Alliance for PE Pipe at www.pepipe.org.

HDPE pipe currently owns close to 100% market share of the gas distribution market, but only 6% of new, water distribution installations in the USA. Viewing HDPE as a growth market, American AVK is excited about working with the Alliance to promote HDPE for water distribution. And, even if customers don't jump on the HDPE bandwagon immediately, we're still in front of the right people with a broad range of traditional valves and hydrants from American AVK!

WATER LOSS – ENGAGE WITH AVK, WE CAN HELP

UNITED KINGDOM

Kieran Fitzpatrick, Head of Marketing for the AVK UK Group (and keen cyclist living in the Peak District), considers how we, as a market leading valves and fittings solutions provider, can contribute to the water industry's drive to cut water loss across the UK water industry. Water loss – engage with AVK, we can help.

By Kieran Fitzpatrick,
Head of UK Marketing,
AVK UK Limited

Anyone who has attended any water conference over the last six months can't help but notice that generally the first point of the opening address relates to leakage and water sustainability closely followed by the consumers' view of the industry.

There has been success in reducing leakage by 35% since 1994, but still the water loss rate post-treatment across England and Wales is 3,100,000,000 litres per day, which is still a staggering number no matter how many times you hear it.

To try to visualise this lost volume I view it in terms of bodies of water that I'm familiar with… Now, if a well-known web based encyclopaedia and my maths can be relied upon, that daily water loss represents over 360 times the maximum content of the very beautiful Howden Dam (at the top of the Upper Derwent Valley reservoir complex in Derbyshire), per day, and that's an impressive body of water!

The issues that this level of water loss creates are well documented but how we provide a sustainable supply of water to the current and future growing population with what seems to be an increasingly unreliable source is in itself a massive task to resolve.

Nobody with an interest in sport, particularly in the Tour de France or cycling in general, can have failed to be impressed by the meteoric rise and seemingly unchallenged victories by the Sky Cycling team in 2012, 2013 and 2015. Their amazing results were down to a strategy of incremental improvements in everything they do, any improvement in any and all facets of the Sky team, no matter how small, were encouraged and celebrated as they knew everything would contribute to the bigger picture – team victory. History proves that this approach worked.

This is how AVK view our contribution to resolving water loss. We cannot solve the water loss issue alone; in terms of the spend on our valves and fittings products as a proportion of the cost of a network or a project is relatively small. We believe, however, we are already contributing toward but could still significantly contribute further to help resolve the issue, should the trading environment be less unit cost driven, but rather more receptive to discussions regarding overall and longer term benefit. We are encouraged that a small number of utility businesses are early adopters of this approach.

Examples of contributory causes of water loss are burst pipes caused by a variety of issues - air entrainment, water hammer etc, leaking pipe joints of all types, leaking equipment seals/ glands dripping taps; some of these factors exacerbated by a reduction in maintenance and local knowledge.

At AVK we consider that four key factors contribute most to reducing water loss, these are detection, repair, prevention and network management, and are therefore part of our innovation process for either products or services.

All of these things can help on the long journey to continue to reduce water loss and improve water sustainability, please allow us to engage.

THE RESHAPE OF GLENFIELD

UNITED KINGDOM

At the end of September 2015 manufacturing activity ceased at the Glenfield Valves factory. The decision to close the production facility coincided with the AVK Group's decision to establish a dedicated sales team to specifically focus on the dams, reservoirs and hydropower market segments.

By Paul Boyden,
Managing Director,
Glenfield Valves

This new sales team would bring together the history, sales expertise and product ranges of Glenfield, Orbinox and Premier Valves. Glenfield itself has an unrivalled history in the hydropower market stretching back as far as 1910 where valves were installed in the Kinlochleven Hydroelectric scheme in Scotland. It is installations like this and those of Orbinox and Premier Valves that the Group wishes to build on, and is an area where we can clearly demonstrate our experience, expertise and knowledge of the Dam, Reservoir and Hydropower "DR&H" market.

In October 2015 the sales, engineering and logistics team of Glenfield moved from Kilmarnock to a dedicated office facility in Prestwick, 10 miles from the original Kilmarnock site. From this new location, Glenfield will concentrate on this new venture with specific geographical responsibility initially for UK, India, South East Asia and China. Orbinox will be responsible for Spain, North, South and Central America, Canada and Turkey. Premier Valves will have responsibility for the countries in Sub Saharan & Southern Africa. The whole team will assume responsibility for other countries as and when opportunities permit. Responsibility for driving the DR&H initiative and bringing together the market segment expertise and product ranges of Glenfield, Orbinox and Premier Valves will remain firmly at the door of the new team.

AVK is a company that is made up of many different businesses, brands, individuals and cultures that are important to the fabric of what makes the company great. The dam, reservoir and hydropower sales teams will pull on all of these resources to maximise the groups potential in each and every project that it becomes involved in. In some countries we will have installed products stretching back decades in others we will be new to the market and need to build our reputation and customer confidence. We hope that by demonstrating our highly engineered valve solutions and expert technical support we will clearly be able to demonstrate to our customers what differentiates us in a positive way from our competitors.

Without question, working with end users and consultants at an early stage in their projects will be a major driver in DR&H success. This means huge efforts to ensure that we are all at the forefront of project design and planning utilising our project tracking system via CRM.

This is a wonderful opportunity for Orbinox and Premier to grow turnover and a fantastic new beginning for Glenfield Valves. All three of the group's most well-known brands are excited to be working together in partnership to contribute to the continued success of the AVK Group. The whole dam, reservoir and hydropower team are looking forward to participating at the early stages of what will surely be a great success for the group. Along the way, we will need to make sure we keep our expectations high, provide superior customer support and position ourselves to be accountable and WIN!

AVK WINS AN IMPRESSIVE ORDER BASED ON A PRODUCT AND SOLUTION PACKAGE

GEORGIA

AVK UK and AVK International are currently working together with Georgia Water and Power (GWP) for the supply of over 350 series 859 control valves. The valves are to be installed as part of a leakage reduction initiative in Tbilisi, Georgia's capital city.

S859 PRV and data logger on test rig at BDV

By David Hurley,
Technical Sales Manager – Control Valves, AVK UK Limited

AVK was awarded the contract for the supply of the control valves despite serious competition from cheaper competitors, but GWP were very clear that they required high quality valves with excellent support and therefore acknowledged the benefits of using series 859 valves from AVK.

Following the initial technical discussions and benefits of series 859 over other control valves in Tbilisi, AVK was also able to provide GWP with further technical assurances using the test facility at Bryan Donkin Valves in Staveley (where the valves are manufactured), to ensure the customer was fully satisfied with the specifications and operational performance. Various trials were performed and videos and data logging results were provided to GWP to confirm that they had selected a superior product and could be confident of complete technical support.

The first delivery of pressure reducing valves has arrived in Georgia and the installation and commissioning is well underway.

AVK commissioning support in Tbilisi

David Hurley, AVK UK Technical Sales Manager for series 859 and Elmira Haansbaek, AVK International Regional Sales Manager for Georgia, have been working closely with GWP in Tbilisi assisting with ensuring correct valve specification is supplied, and ensuring the high level of support you would expect from AVK.

During April 2016 David and Elmira visited several PRV installations and gave comprehensive training to local technicians. During this time, the technical team from GWP were shown how to commission and maintain the valves as well as in-depth troubleshooting methods. Data was also taken during the visit to prove the valves were performing to the accuracy required.

With the supply and installation initiative still on-going, AVK and GWP are already looking into the next step for the pressure control programme. Methods of data collection and advanced pressure control have already been discussed and are due to be implemented later on in the year.

Elmira Haansbaek, AVK International A/S

David Hurley, AVK UK

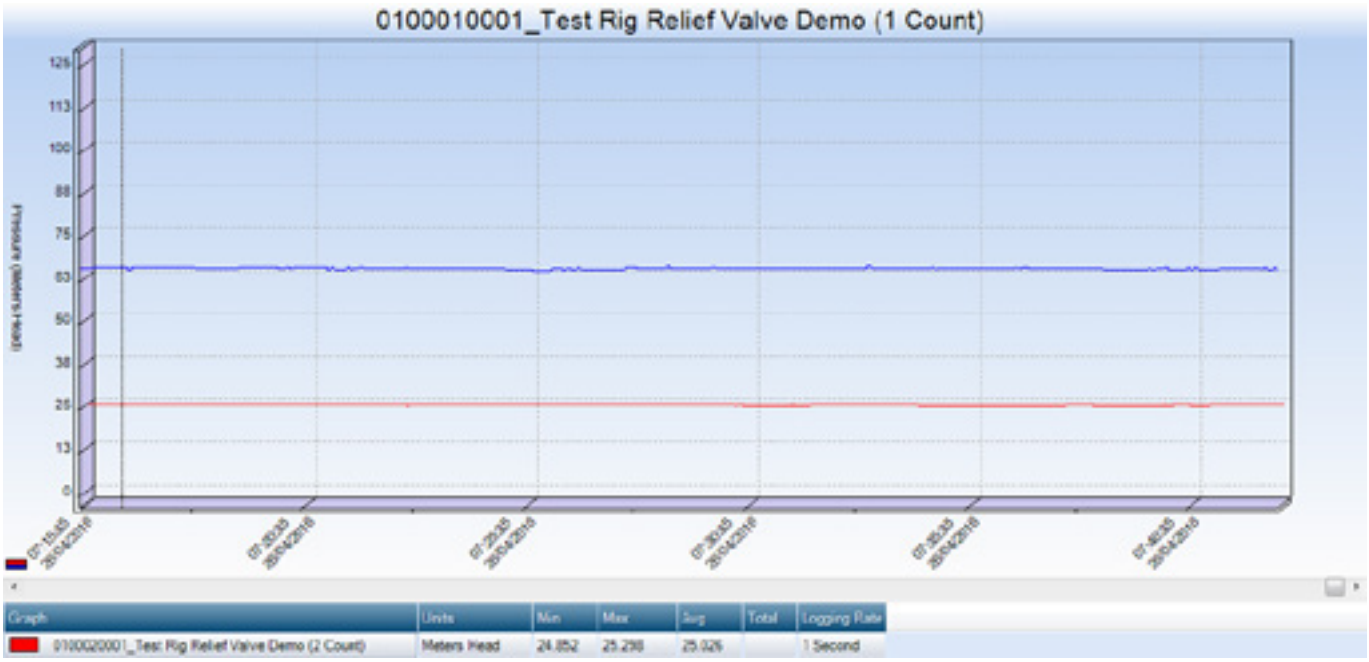

The graph

The graph represents the control of the PRV reducing from approximately 66mhd to exactly 25mhd. The control is extremely accurate and maintains a pressure within 0.04mhd despite fluctuations in the inlet pressure.

SUCCESSFUL LAUNCH OF THE AVK DONKIN ASSET PROTECTION SYSTEM

UNITED KINGDOM

DONKIN ASSET PROTECTION SYSTEM

On Tuesday 15 March 2016 many of the gas industry key decision makers including attendees from as far away as Qatar attended a half day event held at the Donkin Valves Limited factory in Staveley, UK. The event designed to launch a system consisting of three innovations providing one solution, including easy installation, asset integrity and traceability together was promoted as "The Donkin Asset Protection System".

By Richard Stone,
Sales Director (Gas),
AVK UK Limited

The event included actual testing and demonstrations videoed live onto a huge screen which enabled AVK UK to validate to the potential customers:

• How time and cost could be taken out of the installation of a valve.
• How existing methods of corrosion protection are time bound and prone to error.
• The AVK Valve Installation Tracker (AVIT) to log, locate and audit the valve installation.
• How a robust coating can give confidence in long asset life.
• How QR codes can be easily used for asset traceability.

The live tests, some over and above industry specifications were designed to prove the time and cost savings, the high robustness qualities of the coating and the ease of traceability of the assets using the QR code reading system.

Amongst the interactive, busy and carefully choreographed "stage production" the audience witnessed several impact tests with metal plungers, falling aggregate and drop tests all which were then proved not to damage the coating integrity. They also witnessed timed demonstrations of alternative methods of corrosion protection to make their own conclusions about the advantages of the new innovation. They finally witnessed how QR codes can be used to trace the components from assembly in the factory to GPS positioning when installed.

Very positive feedback was immediately ranging from "very professional and slick", "extremely convincing with live testing" to "when can I get some". AVK UK Sales Director Richard Stone said great team work came together from all involved resulting in a very successful day. We are now implementing our follow up plan to get the solution adopted by our customers.


Successful drop

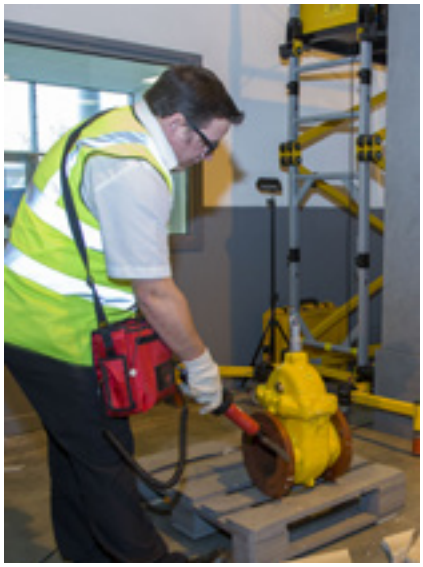
Holiday testing


Impact test dropped from 1.5 meters


Chip test with 32 kg of aggregate dropped from 2 meters


Valve wrapping

RIVERLAND IRRIGATION PROJECT

AUSTRALIA

Riverland irrigation project - stage 1 of the Renmark irrigation trust 3ip modernisation program.

Valves arrive on site in Renmark on 19 August 2015 ahead of schedule

By Craig Wright,
Business Development Manager
SA,WA & TAS,
AVK Australia Pty Ltd

Construction on the new $16.3 million project at Ral Ral Avenue in Renmark commenced in August 2015. The project was designed to install valves for easier manipulation of water through the lines, with the overall project goal of returning more water to the Riverland in Renmark. AVK Australia supplied 8x DN1200, 1x DN1000, 1x DN600 and 10x DN80 gate valves, along with 8x DN1200 dismantling joints through Iplex. We are pleased to announce that this was truly a successful South Australia project executed by the efforts of three dedicated organisations, Exact Construction (Adelaide based), Iplex Pipelines (supplying PVC and GRP pipe from RPC at Lonsdale) and AVK Australia (supplying the valves and dismantling joints). Also involved in the project were a number local Riverland engineering businesses, Ruston, Dix and LAMS who had been subcontracted to install the valves and pipe works.

The initial valve package arrived at site on 19 August 2015 which had to be installed and operational by 27 August 2015. Water was shut down on 27 August to irrigators for only 60hrs while the final installation took place. The order was placed in early June 2015 with production and delivery taking only 10 weeks. This was only possible due to the hard work and commitment by the AVK Australia supply chain department lead by Lenny Vella.

The Renmark Irrigation Trust, Exact Construction and Iplex Pipeline have been extremely complimentary of the customer service and professionalism of AVK Australia in the delivery of the valve package. The on-going development of this project was dependent on having the valves on site and installed ahead of irrigation season. All valves were installed efficiently and in operation ahead of schedule according to the project manager from Exact Construction.

No maintenance issues have been reported to date with the project continuing to deliver the results expected of a higher return rate of water to the Riverland in Renmark.

Site 1 main pump station visit by some of the projects major stakeholders, RIT, Renmark Council, Irrigators - 26 August 2015.

Site 2, Scott Stone (AVK) with some final checks of the valves (4x DN1200 & 1x DN1000) - 26 August 2015.

Site 1 main pump station visit by some of the projects major stakeholders, RIT, Renmark Council, Irrigators - 26 August 2015.

NEW MAIN WATER SUPPLY TO CONNECT CITIES IN NORWAY

NORWAY

Kurt Nyhagen from Brødrene Dahl (Hamar), Jon Ola Eid from Maskinanlegg and Martin Rud from AVK checking that everything is under control. The product is an AVK flexible combi-cross DN 400.

By Martin Rud,
Market Manager,
AVK Norge AS

Ringsaker municipality has approximately 33,500 inhabitants and covers an area of 1.281,1 km^2. The municipality is growing and thus the need for water is growing. To meet the demands, a water main running from the city of Moelv to the city of Rudshøgda is renewed with manholes and service points. The long term goal is to connect the entire municipality from Moelv to the city of Brumunddal with public water.

To uphold the water supply to Rudshøgda, temporary PE Ø=180mm water lines are installed along the entire area.

The reason for Ringsaker municipalicity's upgrade of the water supply is among other things the increase of industrial companies in Rudshøgda, and growth along the lake Mjøsa also adds to the increasing demand for water. In addition to the need for potable water and water for industrial use, high demands are also placed on the waterline's capacity in connection with irrigation and firefighting.

Connection

To stay ahead of the development, Ringsaker municipality has started building a new and modern water connection from the water works in Moelv and up to Rudshøgda. In the long run, the intention is to connect the entire municipality from Moelv to Brunmunddal in a dual-line.

"We renew pipelines and basins based on points of distribution. To begin with, this will increase the capacity up to Rudshøgda. The connection towards Brumunddal is also of societal significance in the long term which is why we use dimensions that, if necessary, can supply the entire region from one of the water works. This holds both safety and practical advantages," explains Fahle Karlsen, Project Manager in Ringsaker municipality.

The existing pipeline is from the 1970s. Now the connections will be 400/500 mm throughout the entire distance, and all minor pipelines will be connected to eight new manholes with new fittings.

Anchoring in the basin bottom is done with Mammut console from Furnes.

"It is a large and important project for the municipality and it is highly important for the water connection in the future," says Karlsen.

Two stages

The work is divided into two stages, and it also includes renewal of main pipelines for wastewater and rainwater. New pipes will be installed from the pumping station for wastewater to the wastewater treatment plant in Moelv, while new connection pipes are installed for rainwater, which is separated and sent to trenches and further out in the terrain.

The work takes place in a junction where roughly 10,000 cars pass every day, which put great demands on the contractor, Maskinanlegg AS in Brumunddal.

"To work in high-density housing areas pose challenges. We have to adapt to traffic and the existing infrastructure. Among other thing, we have to drill our way under the main road to make room for a wastewater pipeline. It was also our intention to install water pipelines below Moelva. We tried with 120 meters controlled drilling mainly due to environmental considerations. Now we will have to dig," says Jon Ola Eid from Maskinanlegg AS, Brumunddal.

Continues on the next page >

The reason for Ringsaker municipalicity's upgrade of the water supply is among other things the increase of industrial companies in Rudshøgda, and growth along the lake Mjøsa also adds to the increasing demand for water. In addition to the need for potable water and water for industrial use, high demands are also placed on the waterline's capacity in connection with irrigation and firefighting.

Eight manholes

Eight manholes with valves are installed as part of the overall renovation of the water pipeline in order to ensure smooth operations and provide access to minor branches of the pipeline. A flexible AVK combi-cross DN 400 is installed in each of the manholes in a distance of approximately 160 meter from each other. The manholes are connecting the existing water distribution with the new water pipeline.

"This combi-cross is an advanced and user-friendly fitting. An example is the full bore centre part and a centre cap with standard flanges for DN 100 fire hydrants, which can easily be connected with optional valves in sizes 150, 200, 250, 300 or 400 mm," says Martin Rud, Market Manager at AVK Norge AS.

The advantage of this solution is that it is possible to mount a blind cover on one or more of the outlets. It has a threadless connection output which can be used for different purposes. The cover can be rotated so the location of this output can be either on the top or bottom of the line, or in any other position that the client may want depending on the application.

Also for firefighting

The assembly between the centre part and the valves is based on a thoroughly tested system which is also used within firefighting.

"This is tested according to the requirements on EN 1074-2, both for strength and tightness testing of pipes with operating pressure up to PN16," says Martin Rud. The centre cap can be removed for easy access to pigging or for inspection and maintenance of pipelines.

"This is the only combi-cross on the market that has a DN 400 centre part and DN 400 valves. Just like the AVK combi-cross in DN 100 – DN 300, the anchoring points are placed on the centre part independent from the valves or flanges. The anchor is therefore 100 % intact even if a coupling or valve is demounted on one or more outlets," says Martin Rud. All the valves have a full bore corresponding with the flange size.

"Whether you choose a DN 150 or DN 400 valve, they have the same overall face-to-face length and a common centre line throughout the installation," explains Martin Rud. The valves are moulded with a lifting eye ensuring that the valve is automatically centered when mounted in connection with renovation or expansion.

Service and three-way

Service connection valves are mounted vertically behind the flange on all the valves. Passage through the ductile valve bodies is smooth and without internal thread, with an epoxy coating according to GSK.

"The combi-cross comes with AVK´s three-way ball valve that ensures water circulation in the ball when it is in closed position. This is particularly advantageous when service valves can be exposed to frost," explains Martin Rud.

This type of valve has been used in Norway for many years and is certified by SINTEF (an independent research organisation) for use as service connection valve.

One of the manholes is also equipped with an Auma actuator from Sigum Fagerberg for immediate remote operation when needed.

All components and materials for both stages are supplied by Brødrene Dahl in Hamar and the project manager is Kurt Nyhagen.

"It is very important that we have a professional wholesaler with us, and Kurt Nyhagen is very attentive which ensures that we can work efficiently," says Jon Ola Eid from the contractor, Maskinanlegg AS in Brumunddal.

AVK KNIFE GATE VALVE WITH LINEAR ELECTRICAL ACTUATOR

Simple installation, minimum maintenance and low energy consumption. This is what you achieve when combining an AVK knife gate valve with a linear electrical actuator from LINAK.

By Lene Mark,
Marketing Manager,
AVK International A/S

The AVK knife gate valve series 702/73 is now available with a linear electrical actuator. It is available in DN 50-300 with the same actuator type for the complete range.

The linear electrical actuator is robust and thoroughly tested, and it has already been installed in several wastewater plants and other industrial applications.

Besides the easy installation and setting, which does not require an external technician, this solution holds several advantages:

- Very compact with low weight and minimal space requirements
- Self-locking with very precise positioning
- Eco-friendly and economical with a low energy consumption
- Can be integrated with existing SRO systems
- At power failure the valve can be opened and closed manually. A battery back-up is available as an optional extra.

The knife gate valves are available with the following control boxes and battery back-up:

- WCU BASIC for analog control 4-20mA feed-back signals
- WCU BUS for integrated BUS-communication module (PROFIBUS)
- WCU UPS external battery back-up unit
- Programming unit for programming and copying of parameter

INVESTING IN AVK VALVES IS A COMMITMENT TO SAFE DRINKING WATER

DENMARK

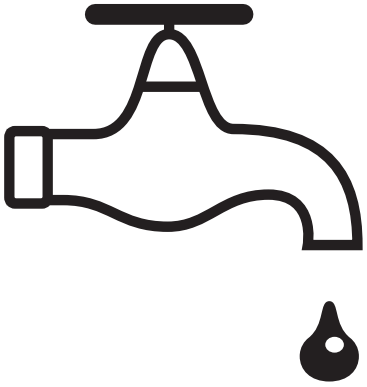

Making the best valves in the business is important for us and synonymous with the AVK brand.

For our customers, it is essential that quality and safety can be documented. This is where third party approvals come in, by establishing a range of requirements concerning valve components and finished valves. These are especially important for drinking water applications, where it is crucial that the components do not pose a risk of contamination and do not affect taste and smell.

Sales & Marketing Department, AVK International A/S

Some of these approvals specifically deal with the materials such as rubber, epoxy coating, plastics and brass used in valves, and some with the complete valve and function. Surprisingly, there are very few pan-European standards. Instead, standards are determined at national level and even in some cases by the local water works in the respective countries.

In the driver's seat concerning rubber

Taking rubber as an example, Germany has its own set of standards for rubber compounds used in drinking water applications, and the same is valid for other European countries as well as for US, China and Australia, among others. Altogether there are at least 20 different sets of standards for rubber compounds worldwide.

Today, AVK is the only valve manufacturer with its own rubber compound manufacturing site. We have developed a family of rubber compounds for drinking water that we consider universal, as it complies with the broadest possible range of approval requirements. However, some countries like Japan and South Korea have specific requirements where special compounds are required.

Anders G. Christensen, sales and R&D director at AVK GUMMI A/S says: "The end users of AVK valves count on us to help them navigate this welter of standards, even though this is not an easy task.

Regulatory requirements themselves can be a moving target, and the number of required approvals is increasing year after year, while many of the existing approvals are undergoing constant revisions".

AVK plays an active part, not only in meeting regulatory requirements, but also in helping to establish them. "At present, we are working with the German authorities to help define and secure a transition to a new approval system that is even better than the previous one", says Anders G. Christensen.

Attention on brass and epoxy
It is evident that materials like brass and epoxy coating also are of high importance, as these, if not chosen or applied correctly, may also contaminate drinking water.

For instance, new EU standards for brass have resulted in a positive list of approved brass materials aiming to set limits for cadmium and lead emission that might migrate into the drinking water. Consequently, AVK has implemented a new brass material for all components, which are in contact with drinking water.

Furthermore, only epoxy manufacturers with the main drinking water approvals are selected for AVK valves, and the coating process in our factories strictly follow the application recommendations set by the epoxy manufacturers. In addition, our coating process is GSK approved.

Proof of quality and safety
Niels Jørgen Hedegaard, head of quality at AVK International A/S in Denmark adds: "Authorities such as the German DVGW, the British WRAS, the French NF and the Dutch KIWA offer standards and approvals for finished valves, and these are also recognized and accepted by other countries that presently don't have their own approval regulations. By obtaining and maintaining the most widely accepted water approvals worldwide, we assure our customers that AVK valves always meet the highest quality and safety standards".

A major investment
All of this adds up to a major investment of time and money for AVK in order to obtain new and maintain existing approvals. "Each approval requires a massive amount of documentation and paperwork, and it can often take weeks or even months to work through the entire approval process" says Niels Jørgen Hedegaard. Re-certification is required every three to five years, and the entire process involves factory audits, product tests and documentation reviews.

The costs are therefore significant. "It's an expense, no doubt," says Niels Jørgen Hedegaard, "but we regard it as a long-term investment. By testing the quality and safety of our valves against the requirements, we ensure that customers always can rely on AVK valves, as opposed to other valves available in the market that do not meet the strict regulatory standards."

Protection of our drinking water
Drinking water is becoming a scarce resource. Therefore, it is of vital importance that we all do our best not to contaminate it, while distributing it to the users. AVK as a global player within valves is certainly committed to keeping drinking water safe by making the best valves in the water business.

Therefore, investing in AVK valves is a commitment to safe drinking water.

STATE OF GREEN LAUNCHES WHITE PAPER ABOUT NON REVENUE WATER

DENMARK

Neglecting to reduce non-revenue water has a serious impact on the financial viability of water utilities due to revenue losses and unnecessarily high operating costs. In order to bring down and maintain a low level of NRW, several aspects need to be addressed – from the initial planning phase to the day-to-day operations as well as the use of high-quality installations and good workmanship.

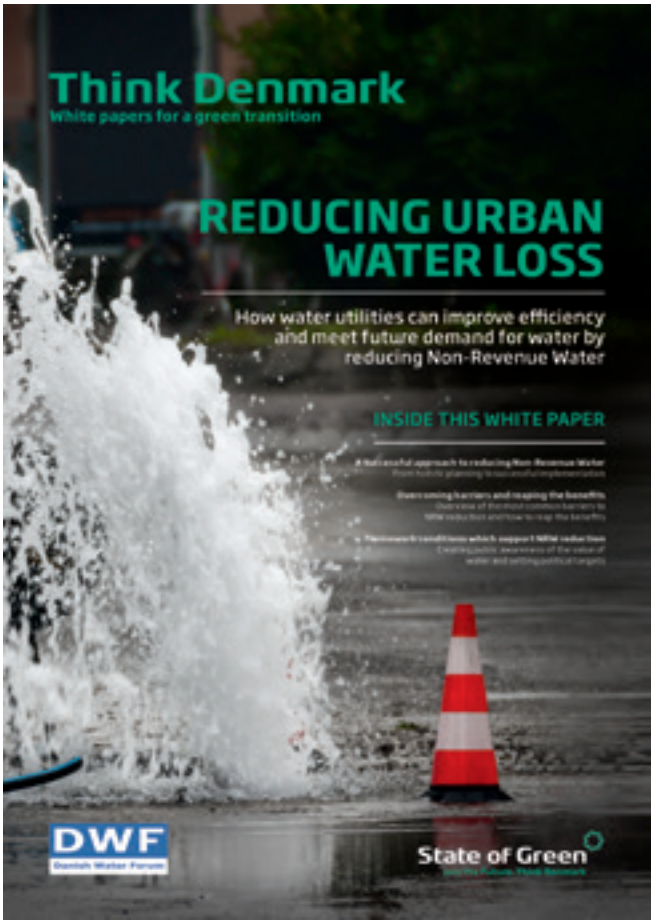

By State of Green
and
Heidi Kjær,
Communications and Marketing Coordinator, AVK International A/S

Among many prominent contributors for the white paper by State of Green, AVK contributed with the text below.

Valve replacement reduces water loss in Romania

A large water utility in Romania, covering a water network of about 400 km and a population of approximately 200,000 people, decided to replace its old pipes with new PE pipes using AVK gate valves as well as new and modern solutions for pumping and pressure regulation. The modernisation and extension of the water and wastewater network reduced the utility's water loss by more than 10% and resulted in big savings on operational costs. The problem with the previously used metal seated gate valves was that they were mounted in concrete wells and often caused problems in relation to shut-off tightness. In contrast, the newly installed AVK resilient seated gate valves have been mounted directly underground and feature rubber which absorbs impurities and are thus able to shut tightly for a lifetime. The Romanian water utility also installed AVK air valves which furthermore had a positive impact on the utility's network as it led to both a reduction in hydraulic problems and a decrease in energy consumption needed for pumping.

Get your own copy

The white peper contains many interesting articles regarding non-revenue water. If you wish to read more of them you can download the white paper online: https://stateofgreen.com/en/news/new-white-paper-reducing-urban-water-loss

For hardcopies please contact:
Michael Ramlau-Hansen
mrh@avk.dk

AVK AROUND THE WORLD

PURDIE STREET COVERS IN BALENCIAGA MUSEUM IN GUETARIA, NEXT TO SAN SEBASTIAN

By Javier García-Noblejas, General Manager, AVK Válvulas S.A.

NOSTALGIA AT DOKK1, AARHUS HARBOUR

By Jesper Sølvsten, Marketing Coordinator, AVK International A/S

DECORATED HYDRANT IN AARHUS

By Lise Rye Brix Østergaard, Communications and Marketing Coordinator, AVK International A/S

COMPETITION

We are happy to announce that the winners of the competition in AVK interlink no. 46 are:

- Jan Nickelsen, AVK International A/S, Denmark
- Mayur Sawant, AVK Valves India Pvt. Ltd., India
- Constance Thai, AVK Southern Africa, South Africa

Gifts are on their way.

The correct answer is: Combi-cross

New competition:

Which product does this enlargement show?

Send an e-mail with the correct answer in which you state your address and the gift you would like to receive – if you win.

E-mail to: lios@avk.dk

Choose between:

Krenit bowl, black with red or yellow inside Ø12.5 cm

Picnic grill in a cooler bag

Hoptimist in yellow

AVK Holding A/S
Bizonvej 1
Skovby
8464 Galten
Denmark

Tel.: +45 8754 2100
Fax.: +45 8754 2120
www.avkvalves.com

Expect... AVK